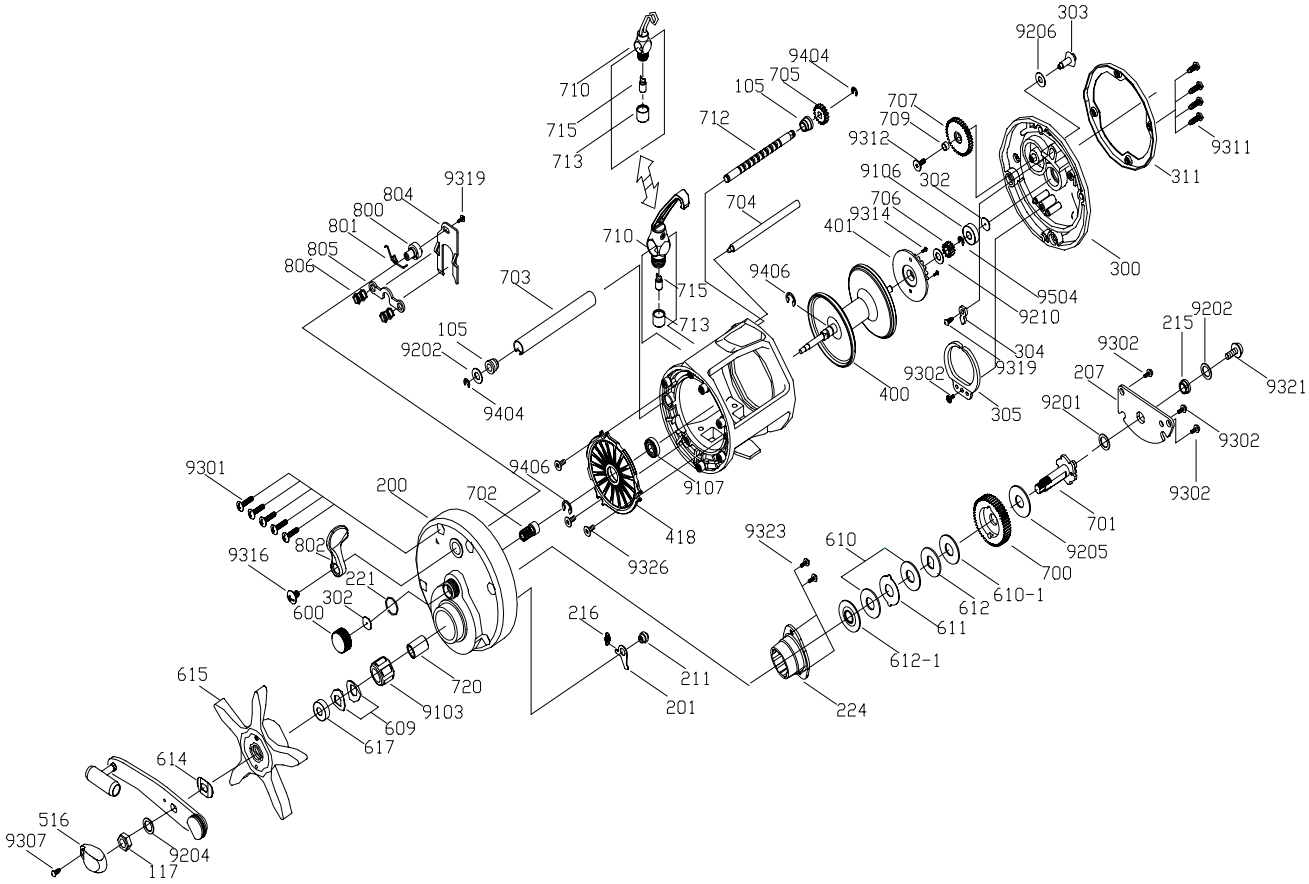

CN - 30LX Spare Parts

key no	new part no	old part no	parts name	lot no
100	11001216	1110008901006	MAIN BODY ASSY.	
105	11050006	11105003-01	WORM SHAFT BUSHING	
117	11170013	11117005-03002	HANDLE NUT	
200	12000744	11200039-0183	RIGHT SIDE PLATE	
201	12010001	11201001-06	ANTI-REVERSE PAWL	
207	12070050	11207015-03001	HOLD PLATE	
211	12110008	11211002-03001	ANTI-REVERSE PAWL PIN	
215	12150015	11215011-03001	HOLD PLATE BUSHING	
216	12160001	11216001-06	ANTI-REVERSE PAWL SPRING	
221	12210001	11221001-07	O RING	
224	12240017	0	ONE WAY CLUTCH BEARING CAP	
300	13000475	11300032-01A06	LEFT SIDE PLATE	
302	13020014	11302002-06001	SPACER	
303	13030005	11303004-03907	CLICK BUTTON	
304	13040001	11304003-06	CLICK PAWL	
305	13050007	11305001-01003	CLICK PAWL SPRING	
311	13110026	11311006-06001	SIDE PLATE COVERS	
400	14000407	1140003314005	ALUMINUM SPOOL ASSY.	
401	14010026	1140101101	CLICK GEAR	
418	14180006	11418006-01001	SPOOL BALL BEARING HOLD PLATE	
500	15000140		BALANCE WEIGHT HANDLE ASSY.	
516	15160001	115160001-01	HANDLE NUT HOLDER	3052
516	15160002	11516001-011	HANDLE NUT HOLDER	
600	16000050	11600015-03001	CAST CONTROL CAP	
609	46090002	14609001-06001	CAST CONTROL CAP	
609	46090001	14609001-05907	DRAG SPRING WASHER	3022
610	16100010	11610004-006	DRAG WASHER	
610-1	16100032	11610013-000	DRAG WASHER	
611	16110005	11611005-06	EARED WASHER	
612	16120027	11612007-06001	KEY WASHER	
612-1	46120002	14612001-06001	KEY WASHER	
614	16140001	11614001-06	TENSION WASHER	
615	16150048	11615007-04002B	STAR DRAG	
617	16170009	11617007-03	DRIVE GEAR SHAFT BUSHING	
700	17000201	1170000603003	DRIVE GEAR	
701	17010103	1170102313001	DRIVE GEAR SHAFT ASSY	
702	17020243	1170200803002	PINION GEAR	
703	17030006	11703007-03907	LEVEL WIND GUARD	
704	17040008	11704005-03907	STABILIZER BAR	
705	17050013	11705008-06	WORM SHAFT GEAR	

key no	new part no	old part no	parts name	lot no
706	17060006	11706003-06	IDLE GEAR	
707	17070004	11707003-01	MEDIUM TRANSMISSION GEAR	
709	17090004	11709002-03	TRANSMISSION GEAR BUSHING	
710	17100045		LINE GUIDE ASSY.	
712	17120019	11712010-03907	WORM SHAFT	
713	17130001	11713001-03907	PAWL CAP	
715	17150004	11715003-06001	LINE GUIDE PAWL	
720	17200002	11720002-06001	ONE WAY CLUTCH INNER RING	
800	18000009	11800003-02002	CLUTCH CAM	3045
800	18000011	11800003-12002	CLUTCH CAM	
801	18010003	11801003-06	CLUTCH CAM SPRING	
802	18020011	11802003-0183	CLUTCH BAR	
804	18040006	11804006-06	CLUTCH CAM SLIDER	
805	18050001	11805001-06	PINION GEAR YOKE	
806	18060001	11806001-06	YOKE SPRING	
9103	0910163	01101612-62	ONE WAY BEARING	3102
9103	0910170	01101612-63	ONE WAY BEARING	
9106	0910227	01041104-61	BALL BEARING	
9107	0910248	01061335-61	BALL BEARING	
9201	0920283	025.1x8x0.5-6	WASHER	
9202	0920114	025.1x9.5x0.2-6	WASHER	
9204	0920291	025.9x10x0.2-6	WASHER	
9205	0920339	028x15x1-1	WASHER	
9206	0920085	024.05x10x0.2-8	WASHER	
9210	0920108	025.1x10.5x.5-6	WASHER	
9301	0930799	03423x12.5-61	SCREW	
9302	0930219	03327.52.6x6-61	SCREW	
9307	0930226	03412.6x4-61	SCREW	
9311	0930310	03423.0x10-61	SCREW	
9312	0930651	03327.52.67.561	SCREW	
9314	0930501	03212x5-617	SCREW	
9316	0930732	03414x5-617	SCREW	
9319	0930196	03312x5-61	SCREW	
9321	0930618	03319.4x3x7-611	SCREW	
9323	0930171	03222.6x4.5-61	SCREW	
9326	0930673	03327x2.6x4-61	SCREW	
9404	29000001	12900001-06	"E" RETAINER	
9406	29000006	12900006-06001	"E" RETAINER	
9504	19010001	11901001-06	"C" RETAINER	